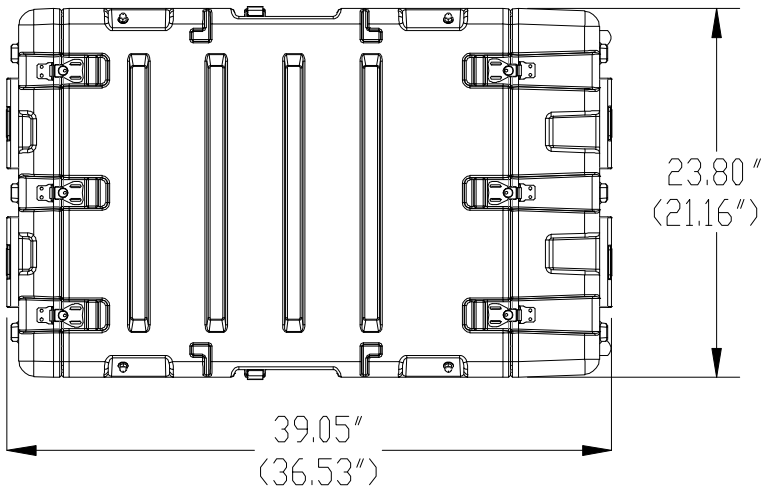

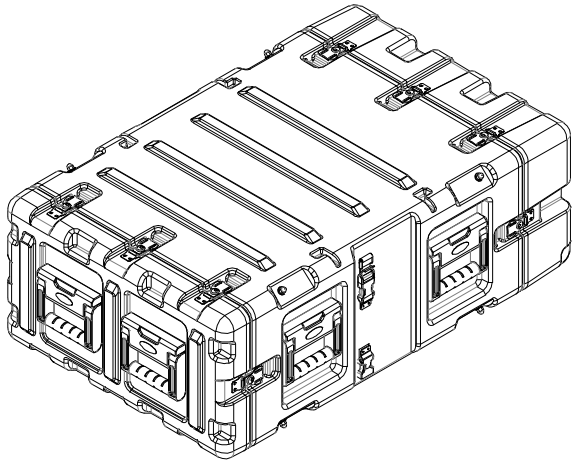

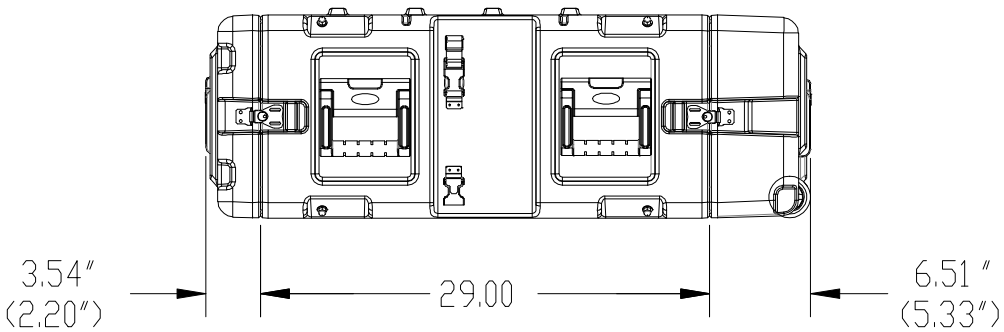

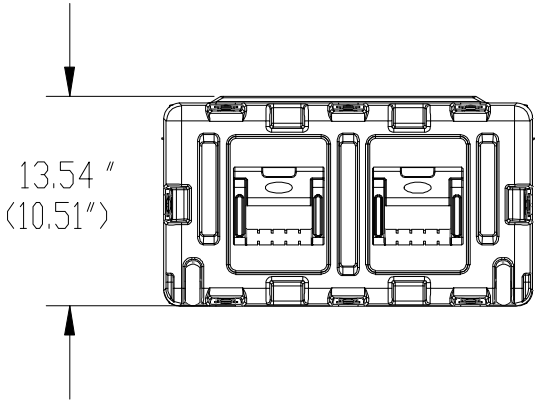

3RR-4U24-25

NOTE: DIMENSIONS IN (X.XX) ARE ID

ALLCASES
Reekstin & Associates, Inc.

300 Mears Blvd.
Oldsmar, FL 34677
Phone: (813) 891-1313
Fax: (813) 891-9988
http://www.allcases.com

This drawing and all information details are the sole property of SKB Corporation, Orange CA. Any unauthorized use will be punished to the full extent of the law.

Case Series:	Removale Rack Series	Dimensions (for reference only)				
Case part#	3RR-4U24-25		Length	Width	Overall	Base / Lid
			left to right	front to back	height	height
Weight:		Exterior	39.05″	23.80″	13.54″	
		Inerior	36.53″	21.16″	10.51″	

5 4 3 2 1